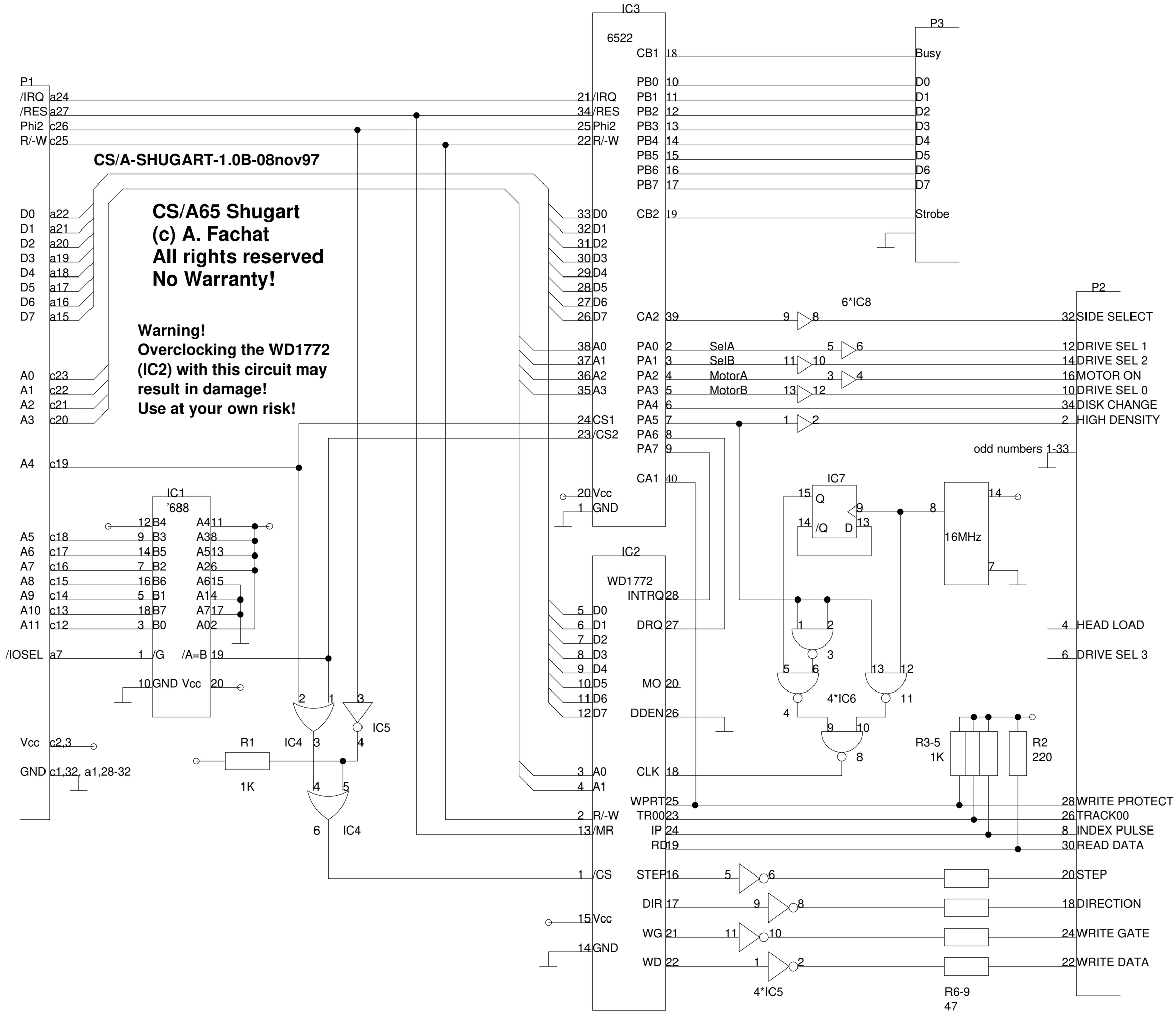
CS/A-SHUGART-1.0B-08nov97
CS/A65 Shugart
(c) A. Fachat
All rights reserved
No Warranty!
Warning!
Overclocking the WD1772
(IC2) with this circuit may
result in damage!
Use at your own risk!
P1
/IRQ a24
/RES a27
Phi2 c26
R/-W c25
D0 a22
D1 a21
D2 a20
D3 a19
D4 a18
D5 a17
D6 a16
D7 a15
A0 c23
A1 c22
A2 c21
A3 c20
A4 c19
A5 c18
A6 c17
A7 c16
A8 c15
A9 c14
A10 c13
A11 c12
/IOSEL a7
Vcc c2,3
GND c1,32, a1,28-32
IC1
'688
12 B4
9 B3
14 B5
7 B2
16 B6
5 B1
18 B7
3 B0
1 /G
10 GND
A4 11
A3 8
A5 13
A2 6
A6 15
A1 4
A7 17
A0 2
/A=B 19
Vcc 20
IC3
6522
21 /IRQ
34 /RES
25 Phi2
22 R/-W
33 D0
32 D1
31 D2
30 D3
29 D4
28 D5
27 D6
26 D7
38 A0
37 A1
36 A2
35 A3
24 CS1
23 /CS2
20 Vcc
1 GND
5 D0
6 D1
7 D2
8 D3
9 D4
10 D5
11 D6
12 D7
3 A0
4 A1
2 R/-W
13 /MR
1 /CS
15 Vcc
14 GND
IC2
WD1772
CB1 18
PB0 10
PB1 11
PB2 12
PB3 13
PB4 14
PB5 15
PB6 16
PB7 17
CB2 19
INTRQ 28
DRQ 27
MO 20
DDEN 26
CLK 18
WPRT 25
TR00 23
IP 24
RD 19
STEP 16
DIR 17
WG 21
WD 22
P3
Busy
D0
D1
D2
D3
D4
D5
D6
D7
Strobe
P2
CA2 39
PA0 2
PA1 3
PA2 4
PA3 5
PA4 6
PA5 7
PA6 8
PA7 9
CA1 40
SelA
SelB
MotorA
MotorB
6*IC8
32 SIDE SELECT
12 DRIVE SEL 1
14 DRIVE SEL 2
16 MOTOR ON
10 DRIVE SEL 0
34 DISK CHANGE
2 HIGH DENSITY
odd numbers 1-33
IC7
Q
/Q
D
16MHz
4 HEAD LOAD
6 DRIVE SEL 3
4*IC6
R3-5
1K
R2
220
28 WRITE PROTECT
26 TRACK00
8 INDEX PULSE
30 READ DATA
20 STEP
18 DIRECTION
24 WRITE GATE
22 WRITE DATA
4*IC5
R6-9
47
R1
1K
IC4
IC5